WWW. EXUSTAR .COM

EXUSTAR

Exustar Enterprise Co. Ltd.

No.111, Aly. 23, Ln. 430, Wang-Fu St., Dadu Dist., Taichung City 432, Taiwan
Tel: +886 (0) 4 2693 7999 Fax: +886 (0) 4 2693 8777
Email: exustar@ms76.hinet.net http://www.exustar.com

Specifications subject to change without notice.
Exustar is a trademark of Exustar Enterprise Co. Ltd.
Copyright © 2018 Exustar Enterprise Co. Ltd.
All other trademarks are the property of their
respective owners. Printed Mar. 2018.

Download on the App Store

Google play

INDOOR CYCLING

EXUSTAR
PEDALS / SHOES

EXUSTAR

INDOOR CYCLING

Exustar's pedals and cycling shoes are proven performers in fitness centers all over the world. For years we have produced a line of specialist indoor pedals that are the most durable in the industry. Our mountain bike and road bike style shoes–used in conjunction with our pedals–are equally adept in the demanding conditions of fitness classes.

performance in motion

Exustar is a quiet achiever. For over 20 years we have produced a highly professional range of cycling shoes and pedals. If we are not as well-known or as flashy as some of our major rivals, that's because we don't run expensive ad campaigns or sponsor corporate race teams. Instead we diligently toil away, researching, testing, and constantly improving our products. Our reputation stands on our products alone, products that are exceptional value for the quality and features they offer.

EXUSTAR

INDEX

PEDALS 6 page

E-PS8	10	E-PS9FSA-BL	16	E-PS207	25
E-PS8SS	11	E-PS9F-GD	17	E-PS816SA-A0	26
E-PS8SSP	11	E-PS9FCA-RD	17	E-PS816SA	26
E-PS7	12	E-PS10SA	18	E-PS816-A0	27
E-PS7F-GD	13	E-PS10	19	E-PS816	27
E-PS7SSP	13	E-PS10CA	19	E-PS801 / E-PS815	28
E-PS9SA	14	E-PS11SA	21	E-X9SA	51
E-PS9	15	E-PS11	22	E-X10SA	51
E-PS9CA	15	E-PS11CA	23	E-X11SA	51

CLEATS 30 page

CLEAT				ADAPTER	
E-ARC5+ / E-BLK5+	31	E-CK3B / E-CK3R	33	E-SL02A	35
E-ARC11+ / E-BLK11+	31	E-CK1B / E-CK1R	33	E-SL02B	35
E-ARC10 / E-BLK10	32	E-CK2B / E-CK2R	33	E-SL02D	35
E-ARC1 / E-BLK1	32				
E-C03F / E-C05F	32				

SHOES 36 page

E-SP319	40	E-SM308	44
E-SR4153	41	E-SM308B	45
E-SR404	42	E-SM825-RD	46
E-SR404B	43		

PEDAL TECHNOLOGY

FULL CONTACT BODY

Increased contact area (62 mm wide) between pedal body and cleat ensures extra power, support, and stability. Interface also enables easier cleat engagement.

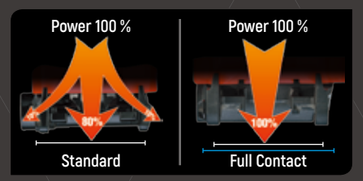

AXLES & BEARINGS

OVER-SIZED NEEDLE BEARINGS

Large diameter needle bearings are used on pedals with over-sized axles (such as spinning pedals, where strength is paramount). Needle bearings are very sooth running.

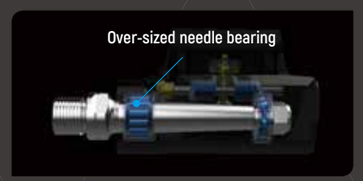

NEEDLE BEARINGS

Needle bearings are used to reduce friction, and increase contact area still allowing a slim axle profile.

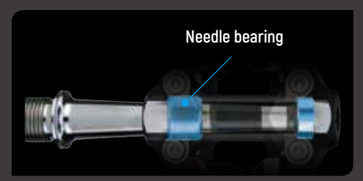

REMOVABLE SHOE PLATFORM

A platform that can be attached to many of our Dual Interface pedals. It allows ordinary sports shoes to be used with clip-in pedals.

OVERSIZE BEARING

These bearings are oversized for maximum strength and durability. Designed for the toughest fitness center conditions.

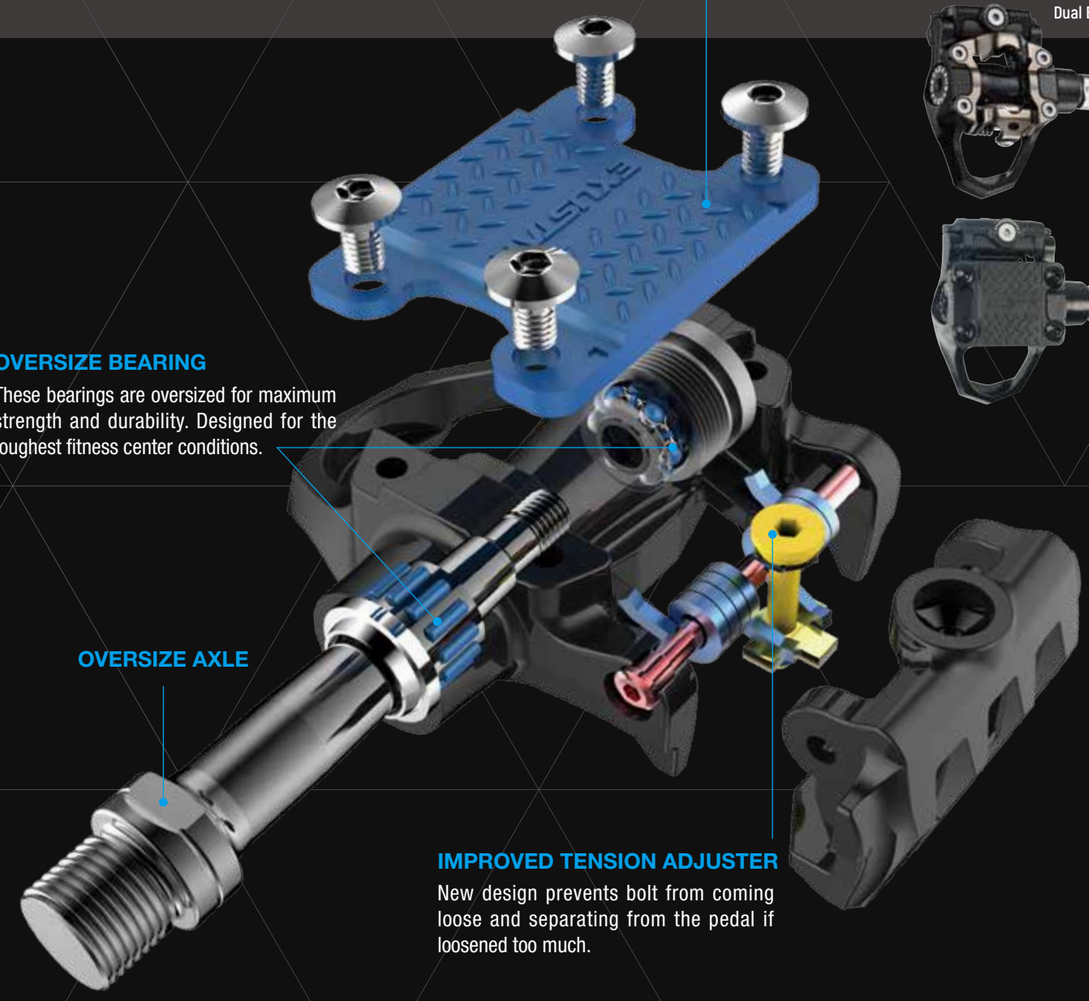

OVERSIZE AXLE

Designed for the toughest fitness center conditions, these axles are oversized for maximum strength and durability.

OVERSIZE AXLES

OVERSIZE CARTRIDGE AXLES

SUPERSIZE AXLES
Available in 4 different lengths.

SUPERSIZE AXLES TECH

SUPERSIZE AXLES

AVAILABLE IN 4 DIFFERENT LENGTHS.

- **Supersize**
- **Anti-loosen device**
- **Extra-strong and durable**
- **Heat-treated**
- **CNC-machined Cr-Mo**
- **Supersize needle bearings**
- **Supersize sealed bearings**

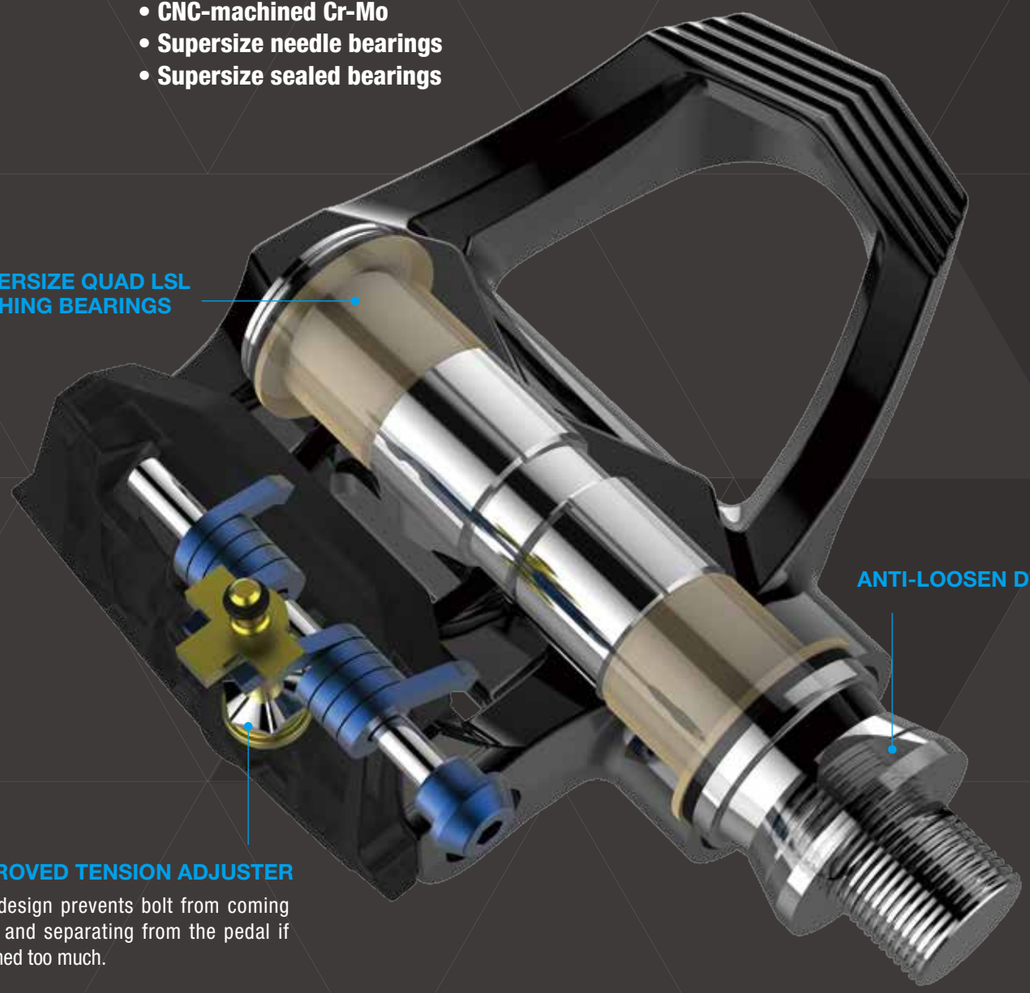

New design prevents bolt from coming loose and separating from the pedal if loosened too much.

SUPERSIZE AXLE

SUPERSIZE LENGTH OPTIONS (Q Factor options)
Four different axle length options allow for varying the Q Factor (the distance between the left and right foot when pedaling). This enables a much higher level of customization of pedal and shoe setup. It is perfect for large shoe sizes and may help cyclists with other biomechanical bike fitting issues.

LENGTH OPTIONS

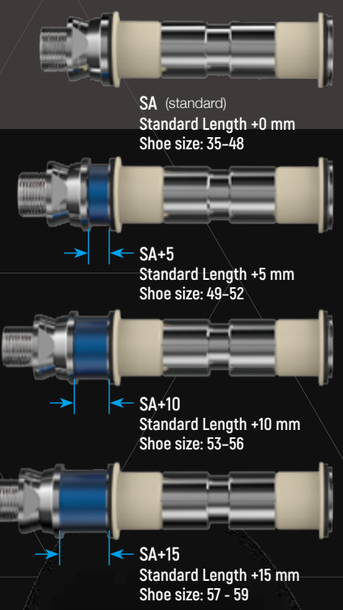

SA (standard)
Standard Length +0 mm
Shoe size: 35–48

SA+5
Standard Length +5 mm
Shoe size: 49–52

SA+10
Standard Length +10 mm
Shoe size: 53–56

SA+15
Standard Length +15 mm
Shoe size: 57 - 59

FOUR DIFFERENT LENGTHS

SA+0 mm

SA+15 mm

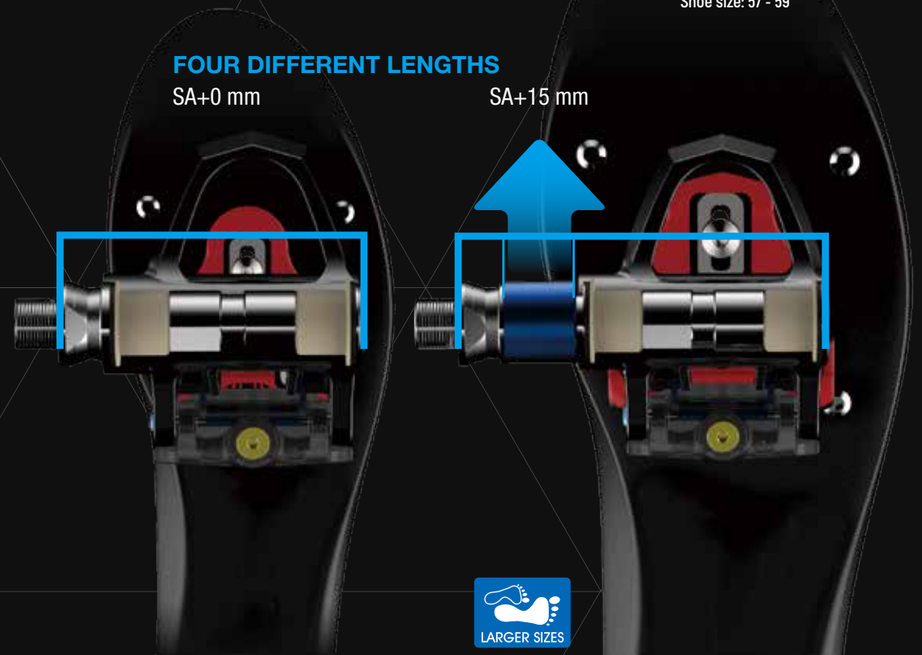

LARGER SIZES

For Standard Shoe Sizes (35–48)

For Larger Shoe Sizes (49–59)

These can also be retrofitted to certain models of Exustar indoor pedals. In some cases, it may be best to consult with a professional bike fitter before using non-standard axles.

INDOOR PEDALS

E-PS8 EXPERT

INDOOR · EPS · EPS-M · WIDE · OVER SIZED · NEEDLE

SIDE A EPS (Compatible with Look Delta).

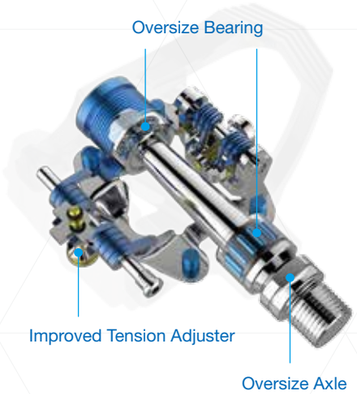

SIDE B EPS-M (Compatible with Shimano SPD).

▶ DUAL BINDING CLIP-IN INDOOR PEDALS With oversize axle

Strong, durable, and versatile indoor pedal. Featuring an extra robust mechanism with oversize axle, and oversize sealed & needle bearings. Anti-corrosion treatment protects against sweat damage.

- **Oversize axle**
- **Extra-strength oversize bearings**
- **Corrosion resistant**

INTERFACE EPS (Compatible with Look Delta). + EPS-M (Compatible with Shimano SPD).
BODY Aluminum, nickel plated & ED black, corrosion resistant.
AXLE Heat-treated, oversize CNC-machined Cr-Mo.
BEARINGS Oversize sealed & needle.
BINDINGS Look Delta-style: Fiberglass-reinforced thermoplastic, tension adjustable with gauge.
EPS-M: Corrosion resistant Cr-Mo, tension adjustable with gauge.
CLEATS E-ARC1 & E-C05F
SIZE 87 x 94 mm
WEIGHT 560 g/pr

Patented

OPTIONS
DUAL BINDING CLIP-IN

EMM208-BP

EMP344 / 345

OVERSIZE AXLES

E-PS8SS EXPERT

INDOOR · EPS · WIDE · OVER SIZED · NEEDLE

SIDE A EPS
(Compatible with Look Delta).

SIDE B
Stainless steel platform

▶ FORGED DUAL BINDING CLIP-IN INDOOR PEDALS

Strong, durable, and versatile indoor pedal. Featuring an extra robust mechanism with oversize axle, and oversize sealed & needle bearings. Anti-corrosion treatment protects against sweat damage.

- **Oversize axle • Extra-strength oversize bearings**
- **Corrosion resistant**

INTERFACE EPS (Compatible with Look Delta).
BODY Aluminum, nickel plated & ED black, corrosion resistant.
AXLE Heat-treated, oversize CNC-machined Cr-Mo.
BEARINGS Oversize sealed & needle.
BINDING Look Delta-style: Fiberglass-reinforced thermoplastic, tension adjustable with gauge.
CLEATS E-ARC1
SIZE 87 x 94 mm
WEIGHT 540 g/pr

Patented

OVERSIZE AXLES

E-PS8SSP EXPERT

INDOOR · EPS · WIDE · OVER SIZED · NEEDLE

SIDE A EPS
(Look Delta-style cleats).

SIDE B
Plastic platform

▶ DUAL INTERFACE INDOOR PEDALS

Strong, durable, and versatile indoor pedal. Featuring an extra robust mechanism with oversize axle, and oversize sealed & needle bearings. Anti-corrosion treatment protects against sweat damage.

- **Oversize axle**
- **Extra-strength oversize bearings**
- **Corrosion resistant**

INTERFACE Look Delta-style.
BODY Aluminum, nickel plated & ED black, corrosion resistant.
AXLE Heat-treated, oversize CNC-machined Cr-Mo.
BEARINGS Oversize sealed & needle.
BINDING Look Delta-style: Fiberglass-reinforced thermoplastic, tension adjustable with gauge.
CLEATS E-ARC1
SIZE 87 x 94 mm
WEIGHT 475 g/pr

Patented

OVERSIZE AXLES

INDOOR PEDALS

E-PS7 EXPERT

INDOOR · EPS · EPS-M · LARGER SIZES · WIDE · OVER SIZED · NEEDLE

SIDE A EPS (Compatible with Look Delta).

SIDE B EPS-M (Compatible with Shimano SPD).

▶ DUAL INTERFACE INDOOR PEDALS

Strong, durable, and versatile indoor pedal, compatible with Look Delta-style cleats or Shimano SPD-style cleats. Featuring an extra robust mechanism with oversize axle, and oversize sealed & needle bearings. Anti-corrosion treatment protects against sweat damage.

- **Full contact body • Oversize axle**
- **Extra-strength oversize bearings**
- **Corrosion resistant**

INTERFACE EPS (Compatible with Look Delta). + EPS-M (Compatible with Shimano SPD).
BODY Aluminum, nickel plated & ED black, corrosion resistant.
AXLE Heat-treated, oversize CNC-machined Cr-Mo.
BEARINGS Oversize sealed & needle.
BINDING Look Delta-style: Fiberglass-reinforced thermoplastic, tension adjustable with gauge.
EPS-M: Corrosion resistant Cr-Mo, tension adjustable with gauge.
CLEATS E-ARC1 & E-C05F
SIZE 87 x 94 mm
WEIGHT 540 g/pr

Patented

OPTIONS
DUAL BINDING CLIP-IN

EMM208-BP

EMP344 / 345

OVERSIZE AXLES

SIDE A EPS
(Compatible with Look Delta).

SIDE B EPS-M
(Compatible with Shimano SPD).

E-PS7F-GD EXPERT

INDOOR · EPS · EPS-M · WIDE · OVER SIZED · NEEDLE · FORGED · COLOUR

▶ FORGED DUAL BINDING CLIP-IN INDOOR PEDALS

Strong, durable, and versatile indoor pedal with a forged aluminum body. Featuring an extra robust mechanism with oversize axle, and oversize sealed & needle bearings.

- **Full contact body • Oversize axle**
- **Forged aluminum body**
- **Extra-strength oversize bearings**

INTERFACE EPS (Compatible with Look Delta). + EPS-M (Compatible with Shimano SPD).
BODY Forged aluminum, anodized.
AXLE Heat-treated, oversize CNC-machined Cr-Mo.
BEARINGS Oversize sealed & needle.
BINDING Look Delta-style: Fiberglass-reinforced thermoplastic, tension adjustable with gauge.
EPS-M: Corrosion resistant Cr-Mo, tension adjustable with gauge.
CLEATS E-ARC1 & E-C05F
SIZE 87 x 94 mm
WEIGHT 540 g/pr

Patented

OPTIONS

E-PS7F-MBK · E-PS7F · E-PS7F-BL · E-PS7F-RD

OVERSIZE AXLES

E-PS7SSP EXPERT

INDOOR · EPS · WIDE · OVER SIZED · NEEDLE

SIDE A EPS
(Compatible with Look Delta).

SIDE B
Plastic

▶ DUAL INTERFACE INDOOR PEDALS

Strong, durable, and versatile indoor pedal. Featuring an extra robust mechanism with oversize axle, and oversize sealed & needle bearings. Anti-corrosion treatment protects against sweat damage.

- **Full contact body**
- **Oversize axle**
- **Extra-strength oversize bearings**
- **Corrosion resistant**

INTERFACE EPS (Compatible with Look Delta).
BODY Aluminum, nickel plated & ED black, corrosion resistant.
AXLE Heat-treated, oversize CNC-machined Cr-Mo.
BEARINGS Oversize sealed & needle.
BINDING Look Delta-style: Fiberglass-reinforced thermoplastic, tension adjustable with gauge.
CLEATS E-ARC1
SIZE 87 x 94 mm
WEIGHT 475 g/pr

Patented

OPTIONS

E-PS7 SS **SIDE B**
Stainless steel platform

E-PS7 SS1
SIDE B No platform

OVERSIZE AXLES

E-PS9SA

EXPERT

INDOOR · EPS · LARGER SIZES · WIDE

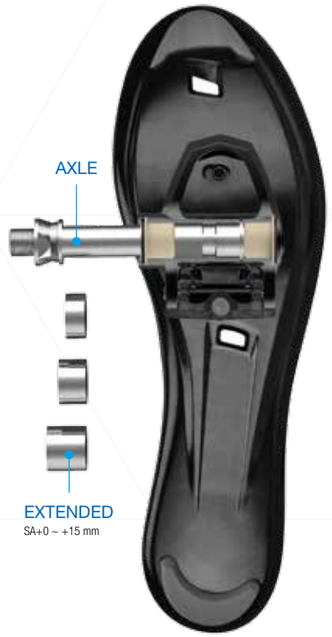

▶ INDOOR PEDALS With oversize axle

Strong, durable indoor pedal. Featuring an extra robust mechanism with supersize axle, and quad LSL bearings. Anti-loosening axle device. Anti-corrosion treatment protects against sweat damage.

- **Full contact body**
- **Supersize axle • Quad bearings**
- **Anti-loosening axle device**

INTERFACE EPS (Compatible with Look Delta).
BODY Aluminum, nickel plated & ED black, corrosion resistant.
AXLE Heat-treated, supersize CNC-machined Cr-Mo.
Anti-loosening device.
BEARINGS Quad LSL bearings.
BINDINGS Look Delta-style: Fiberglass-reinforced thermoplastic, tension adjustable with gauge.
CLEATS E-ARC1
SIZE 88 x 94 mm
WEIGHT 655 g/pr

Patented

SUPERSIZE AXLE OPTIONS
Tightening the locking ring prevents axle from ever accidentally coming loose.

SUPERSIZE AXLES
Available in 4 different lengths.

E-PS9

EXPERT

INDOOR · EPS · WIDE

▶ INDOOR PEDALS With oversize axle

Strong, durable indoor pedal. Featuring an extra robust mechanism with oversize axle, and oversize sealed & needle bearings. Anti-corrosion treatment protects against sweat damage.

- **Full contact body • Oversize axle**
- **Extra-strength oversize bearings**
- **Corrosion resistant**

INTERFACE EPS (Compatible with Look Delta).
BODY Aluminum, nickel plated & ED black, corrosion resistant.
AXLE Heat-treated, oversize CNC-machined Cr-Mo.
BEARINGS Oversize sealed & needle.
BINDING Look Delta-style: Fiberglass-reinforced thermoplastic, tension adjustable with gauge.
CLEATS E-ARC1
SIZE 88 x 94 mm
WEIGHT 524 g/pr

Patented

OVERSIZE AXLES

E-PS9CA

EXPERT

INDOOR · EPS · WIDE

▶ INDOOR PEDALS With oversize axle and cartridge bearings

Strong, durable indoor pedal. Featuring a machined Cr-Mo axle, and oversize sealed & needle bearings. Anti-corrosion treatment protects against sweat damage.

- **Full contact body • Oversize axle**
- **Extra-strength oversize bearings**
- **Corrosion resistant**

INTERFACE EPS (Compatible with Look Delta).
BODY Aluminum, nickel plated & ED black, corrosion resistant.
AXLE Heat-treated, oversize CNC-machined Cr-Mo (cartridge).
BEARINGS Oversize sealed & needle (integrated cartridge).
BINDING Look Delta-style: Fiberglass-reinforced thermoplastic, tension adjustable with gauge.
CLEATS E-ARC1
SIZE 88 x 94 mm
WEIGHT 518 g/pr

Patented

OVERSIZE CARTRIDGE AXLES

E-PS9FSA-BL

EXPERT

INDOOR · EPS · LARGER SIZES · WIDE · FORGED · COLOUR

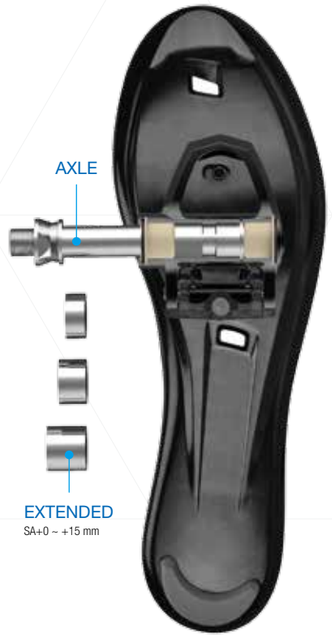

▶ FORGED INDOOR PEDALS With oversize axle

Strong, durable indoor pedal with a forged aluminum body. Featuring an extra robust mechanism with supersize axle, and quad LSL bearings.Antiloosening axle device.

- **Full contact body**
- **Supersize axle • Forged aluminum body**
- **Quad bearings**
- **Anti-loosening axle device**

INTERFACE EPS (Compatible with Look Delta).
BODY Forged aluminum, anodized.
AXLE Heat-treated, supersize CNC-machined Cr-Mo.
Antiloosening device.
BEARINGS Quad LSL bearings.
BINDING Look Delta-style: Fiberglass-reinforced thermoplastic, tension adjustable with gauge.
CLEATS E-ARC1
SIZE 88 x 94 mm
WEIGHT 660 g/pr

Patented

SUPERSIZE AXLE OPTIONS
Tightening the locking ring prevents axle from ever accidentally coming loose.

E-PS9FSA
+0 mm (standard)
E-PS9FSA+5
+5 mm
E-PS9FSA+10
+10 mm
E-PS9FSA+15
+15 mm

OPTIONS

E-PS9FSA-MBK · E-PS9FSA · E-PS9FSA-GD · E-PS9FSA-RD

SUPERSIZE AXLES
Available in 4 different lengths.

E-PS9F-GD

EXPERT

INDOOR · EPS · WIDE · FORGED · COLOUR

▶ FORGED INDOOR PEDALS With oversize axle

Strong, durable indoor pedal with a forged aluminum body. Featuring an extra robust mechanism with oversize axle, and oversize sealed & needle bearings.

- **Full contact body**
- **Oversize axle • Forged aluminum body**
- **Extra-strength oversize bearings**

INTERFACE EPS (Compatible with Look Delta).
BODY Forged aluminum, anodized.
AXLE Heat-treated, oversize CNC-machined Cr-Mo.
BEARINGS Oversize sealed & needle.
BINDING Look Delta-style: Fiberglass-reinforced thermoplastic, tension adjustable with gauge.
CLEATS E-ARC1
SIZE 88 x 94 mm
WEIGHT 531 g/pr

Patented

OPTIONS

E-PS9F-MBK · E-PS9F · E-PS9F-BL · E-PS9F-RD

OVERSIZE AXLES

E-PS9FCA-RD

EXPERT

INDOOR · EPS · WIDE · FORGED · COLOUR

▶ FORGED INDOOR PEDALS
With oversize axle and cartridge bearings

Strong, durable indoor pedalwith a forged aluminum body. Featuring a machined Cr-Mo axle, and oversize sealed & needle bearings.

- **Full contact body**
- **Oversize axle • Forged aluminum body**
- **Extra-strength oversize bearings**

INTERFACE EPS (Compatible with Look Delta).
BODY Forged aluminum, anodized.
AXLE Heat-treated, oversize CNC-machined Cr-Mo (cartridge).
BEARINGS Oversize sealed & needle (integrated cartridge).
BINDING Look Delta-style: Fiberglass-reinforced thermoplastic, tension adjustable with gauge.
CLEATS E-ARC1
SIZE 88 x 94 mm
WEIGHT 521 g/pr

Patented

OPTIONS

E-PS9FCA-MBK · E-PS9FCA · E-PS9FCA-GD · E-PS9FCA-BL

OVERSIZE CARTRIDGE AXLES

E-PS10SA

EXPERT

INDOOR · EPS · LARGER SIZES · WIDE

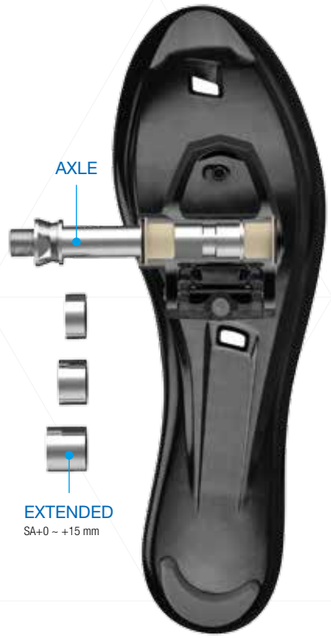

▶ INDOOR PEDALS With supersize axle

Strong, durable indoor pedal. Featuring an extra robust mechanism with supersize axle, and quad LSL bearings. Antiloosening axle device. Anti-corrosion treatment protects against sweat damage.

- **Full contact body**
- **Supersize axle**
- **Quad bearings**
- **Anti-loosening axle device**

INTERFACE EPS (Compatible with Look Delta).
BODY Aluminum, nickel plated & ED black, corrosion resistant.
AXLE Heat-treated, supersize CNC-machined Cr-Mo.
Antiloosening device.
BEARINGS Quad LSL bearings.
BINDING Look Delta-style: Fiberglass-reinforced thermoplastic, tension adjustable with gauge.
CLEATS E-ARC1
SIZE 89 x 94 mm
WEIGHT 645 g/pr

Patented

SUPERSIZE AXLE OPTIONS
Tightening the locking ring prevents axle from ever accidentally coming loose.

E-PS10FSA
+0 mm (standard)

E-PS10SA+5
+5 mm

E-PS10SA+10
+10 mm

E-PS10SA+15
+15 mm

SUPERSIZE AXLES
Available in 4 different lengths.

E-PS10

EXPERT

INDOOR · EPS · WIDE

▶ INDOOR PEDALS With oversize axle

Strong, durable indoor pedal. Featuring an extra robust mechanism with oversize axle, and oversize sealed & needle bearings. Anti-corrosion treatment protects against sweat damage.

- **Full contact body**
- **Oversize axle**
- **Extra-strength oversize bearings**
- **Corrosion resistant**

INTERFACE EPS (Compatible with Look Delta).
BODY Aluminum, nickel plated & ED black, corrosion resistant.
AXLE Heat-treated, oversize CNC-machined Cr-Mo.
BEARINGS Oversize sealed & needle.
BINDING Look Delta-style: Fiberglass-reinforced thermoplastic, tension adjustable with gauge.
CLEATS E-ARC1
SIZE 89 x 94 mm
WEIGHT 516 g/pr

Patented

OVERSIZE AXLES

E-PS10CA

EXPERT

INDOOR · EPS · WIDE

▶ INDOOR PEDALS With oversize axle and cartridge bearings

Strong, durable indoor pedal. Featuring a machined Cr-Mo axle, and oversize sealed & needle bearings. Anti-corrosion treatment protects against sweat damage.

- **Full contact body**
- **Oversize axle**
- **Extra-strength oversize bearings**
- **Corrosion resistant**

INTERFACE EPS (Compatible with Look Delta).
BODY Aluminum, nickel plated & ED black, corrosion resistant.
AXLE Heat-treated, oversize CNC-machined Cr-Mo (cartridge).
BEARINGS Oversize sealed & needle (integrated cartridge).
BINDING Look Delta-style: Fiberglass-reinforced thermoplastic, tension adjustable with gauge.
CLEATS E-ARC1
SIZE 89 x 94 mm
WEIGHT 508 g/pr

Patented

OVERSIZE CARTRIDGE AXLES

DUAL BINDING TECHNOLOGY

E-PS11SA EXPERT

INDOOR | EPS | EPS-M | LARGER SIZES | WIDE

SIDE A EPS (Compatible with Look Delta).

SIDE B EPS-M (Compatible with Shimano SPD).

▶ DUAL BINDING INDOOR PEDALS With supersize axle

Strong, durable indoor pedal. Featuring an extra robust mechanism with supersize axle, and quad LSL bearings. Antiloosening axle device. Anti-corrosion treatment protects against sweat damage.

- **Full contact body**
- **Supersize axle • Quad bearings**
- **Anti-loosening axle device**

INTERFACE EPS (Compatible with Look Delta). + EPS-M (Compatible with Shimano SPD).
BODY Aluminum, nickel plated & ED black, corrosion resistant.
AXLE Heat-treated, supersize CNC-machined Cr-Mo. Antiloosening device.
BEARINGS Quad LSL bearings.
BINDINGS Look Delta-style: Fiberglass-reinforced thermoplastic, tension adjustable with gauge.
EPS-M: Corrosion resistant Cr-Mo, tension adjustable with gauge.
CLEATS E-ARC1 & E-C05F
SIZE 89 x 94 mm
WEIGHT 817 g/pr

Patented

SUPERSIZE AXLE OPTIONS
Tightening the locking ring prevents axle from ever accidentally coming loose.

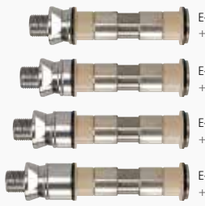

OPTIONS
DUAL BINDING CLIP-IN

EMM208-BP

EMP391

SUPERSIZE AXLES
Available in 4 different lengths.

E-PS11 EXPERT

INDOOR EPS EPS-M WIDE

SIDE A EPS (Compatible with Look Delta).

SIDE B EPS-M (Compatible with Shimano SPD).

DUAL BINDING INDOOR PEDALS With oversize axle

Strong, durable, and versatile indoor pedal. Featuring an extra robust mechanism with oversize axle, and oversize sealed & needle bearings. Anti-corrosion treatment protects against sweat damage.

- **Full contact body**
- **Oversize axle**
- **Extra-strength oversize bearings**
- **Corrosion resistant**

INTERFACE EPS (Compatible with Look Delta). + EPS-M (Compatible with Shimano SPD).
BODY Aluminum, nickel plated & ED black, corrosion resistant.
AXLE Heat-treated, oversize CNC-machined Cr-Mo.
BEARINGS Oversize sealed & needle.
BINDING Look Delta-style: Fiberglass-reinforced thermoplastic, tension adjustable with gauge.
EPS-M: Corrosion resistant Cr-Mo, tension adjustable with gauge.
CLEATS E-ARC1 & E-C05F
SIZE 89 x 94 mm
WEIGHT 688 g/pr

Patented

OPTIONS
DUAL BINDING CLIP-IN

EMM208-BP

EMP391

OVERSIZE AXLES

E-PS11CA EXPERT

INDOOR EPS EPS-M WIDE

SIDE A EPS (Compatible with Look Delta).

SIDE B EPS-M (Compatible with Shimano SPD).

DUAL BINDING INDOOR PEDALS With oversize axle and cartridge bearings

Strong, durable, and versatile indoor pedal. Featuring an extra robust mechanism with oversize axle, and oversize sealed & needle bearings. Anti-corrosion treatment protects against sweat damage.

- **Full contact body**
- **Oversize axle**
- **Extra-strength oversize bearings**
- **Corrosion resistant**

INTERFACE EPS (Compatible with Look Delta). + EPS-M (Compatible with Shimano SPD).
BODY Aluminum, nickel plated & ED black, corrosion resistant.
AXLE Heat-treated, oversize CNC-machined Cr-Mo (cartridge).
BEARINGS Oversize sealed & needle (integrated cartridge).
BINDING Look Delta-style: Fiberglass-reinforced thermoplastic, tension adjustable with gauge.
EPS-M: Corrosion resistant Cr-Mo, tension adjustable with gauge.
CLEATS E-ARC1 & E-C05F
SIZE 89 x 94 mm
WEIGHT 680 g/pr

Patented

OPTIONS
DUAL BINDING CLIP-IN

EMM208-BP

EMP391

OVERSIZE CARTRIDGE AXLES

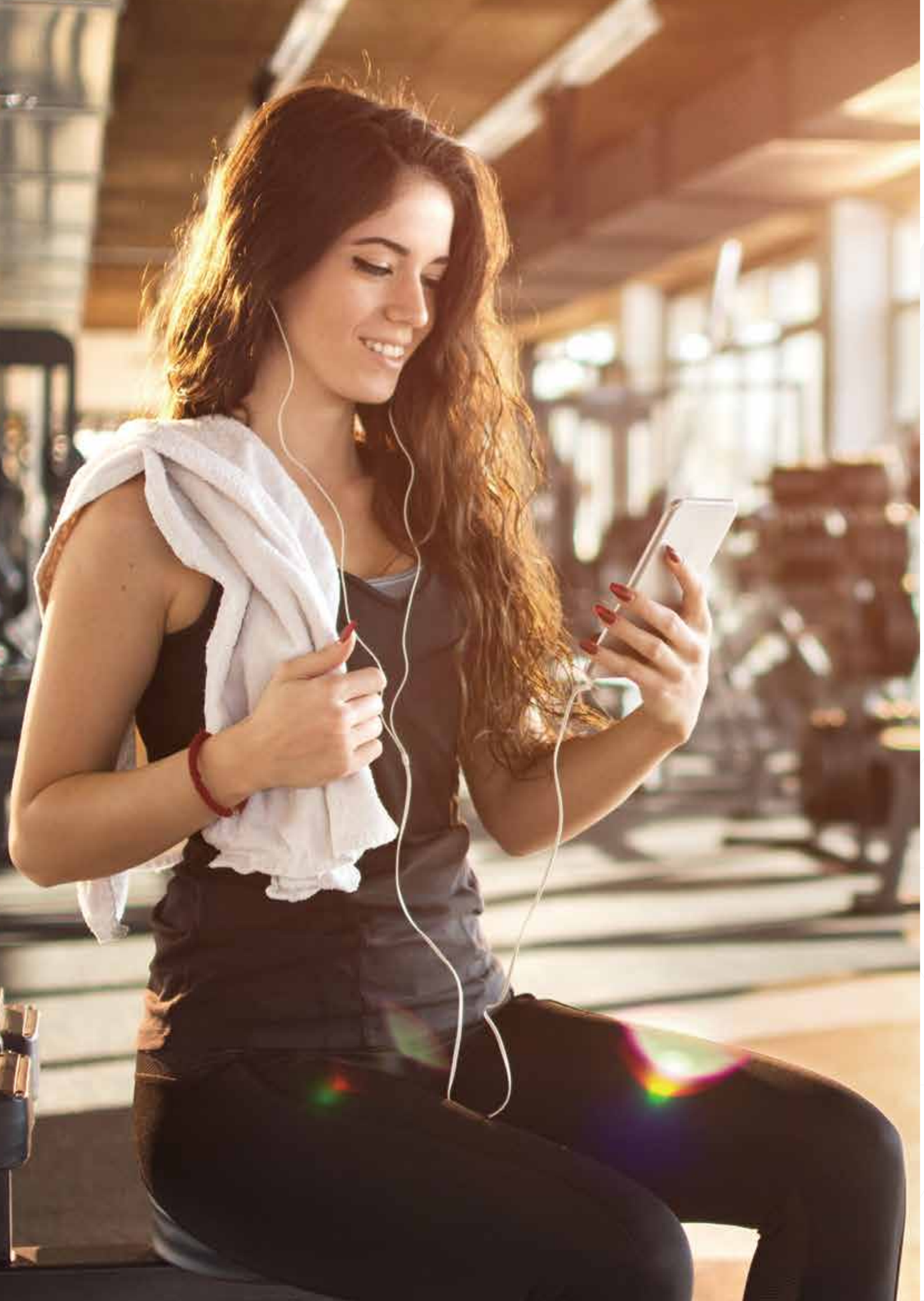

E-PS207

EXPERT

INDOOR | EPS-R | EPS-M | OVER SIZED | NEEDLE

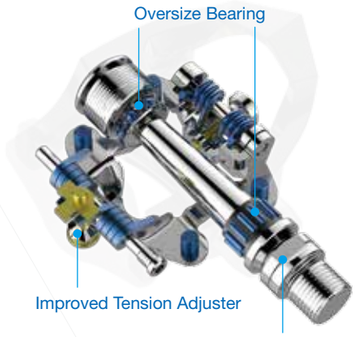

SIDE A EPS-R (Compatible with Look Keo).

SIDE B EPS-M (Compatible with Shimano SPD).

DUAL BINDING INDOOR PEDALS

Strong, durable, and versatile indoor pedal. Featuring an extra robust mechanism with oversize axle and oversize sealed & needle bearings. Anti-corrosion treatment protects against sweat damage.

- **Full contact body**
- **Oversize axle**
- **Extra-strength oversize bearings**
- **Corrosion resistant**

INTERFACE EPS-R (Compatible with Look Keo). + EPS-M (Compatible with Shimano SPD).
BODY Aluminum, nickel plated & ED black, corrosion resistant.
AXLE Heat-treated, CNC-machined Cr-Mo.
BEARINGS Sealed & needle.
BINDING EPS-R: Fiberglass-reinforced thermoplastic, tension adjustable with gauge.
EPS-M: Corrosion resistant Cr-Mo, tension adjustable with gauge.
CLEATS E-ARC11 & E-C05F
SIZE 87 x 90 mm
WEIGHT 530 g/pr

Patented

DUAL BINDING CLIP-IN

EMM208-BP

INDOOR PEDALS

SIDE A Platform + Toe clip attachable

E-PS816SA-A0 EXPERT

INDOOR EPS-M

▶ INDOOR PEDALS With supersize axle

A strong, durable and versatile indoor pedal. Featuring a supersize axle and quad LSL bearings, an extra robust mechanism and an anti-loosen axle device. Interface allows use with: 1. EPS-M (Compatible Shimano MTB system). 2. Platform pedals. 3. Toe clips and straps.

- **Supersize axle**
- **Supersize quad bearings**
- **Anti-loosen axle device**

BODY Aluminum, ED black.
AXLE Heat-treated, supersize CNC-machined Cr-Mo. Antiloosening device.
BEARINGS Quad LSL bearings.
BINDING EPS-M: Corrosion resistant Cr-Mo, tension adjustable with gauge.
CLEATS E-C05F
SIZE 98 x 115 mm (w/ toe clip 98 x 165 mm)

Patented

SIDE B EPS-M (Compatible with Shimano SPD)..

E-PS816SA EXPERT

INDOOR EPS-M

▶ INDOOR PEDALS With supersize axle

A strong, durable and versatile indoor pedal. Featuring a supersize axle and quad LSL bearings, an extra robust mechanism and an anti-loosen axle device. Interface allows use with: 1. EPS-M (Compatible Shimano MTB system). 2. Platform pedals.

- **Supersize axle**
- **Supersize quad bearings**
- **Anti-loosen axle device**

BODY Aluminum, ED black.
AXLE Heat-treated, supersize CNC-machined Cr-Mo. Antiloosening device.
BEARINGS Quad LSL bearings.
BINDING EPS-M: Corrosion resistant Cr-Mo, tension adjustable with gauge.
CLEATS E-C05F
SIZE 98 x 165 mm

Patented

SUPERSIZE AXLES
Available in 4 different lengths.

SIDE A Platform + Toe clip attachable

E-PS816-A0 EXPERT

INDOOR EPS-M

▶ INDOOR PEDALS With oversize axle

A strong, durable and versatile indoor pedal. Featuring an oversize axle and sealed & needle bearings and a robust mechanism. Interface allows use with: 1. EPS-M (Compatible Shimano MTB system). 2. Platform pedals. 3. Toe clips and straps.

- **Oversize axle**
- **Oversize quad bearings**

BODY Aluminum, ED black.
AXLE Heat-treated, oversize CNC-machined Cr-Mo.
BEARINGS Oversize sealed & needle.
BINDING EPS-M: Corrosion resistant Cr-Mo, tension adjustable with gauge.
CLEATS E-C05F
SIZE 98 x 115 mm (w/ toe clip 98 x 165 mm)

Patented

SIDE B EPS-M (Compatible with Shimano SPD).

E-PS816 EXPERT

INDOOR EPS-M

▶ INDOOR PEDALS With oversize axle

A strong, durable and versatile indoor pedal. Featuring an oversize axle, a robust mechanism with oversize sealed & needle bearings. Interface allows use with: 1. EPS-M (Compatible Shimano MTB system). 2. Platform pedals.

- **Oversize axle**
- **Oversize quad bearings**

BODY Aluminum, ED black.
AXLE Heat-treated, oversize CNC-machined Cr-Mo.
BEARINGS Oversize sealed & needle.
BINDING EPS-M: Corrosion resistant Cr-Mo, tension adjustable with gauge.
CLEATS E-C05F
SIZE 98 x 115 mm

Patented

OVERSIZE AXLES

INDOOR PEDALS

SIDE A EPS-M
(Compatible with Shimano SPD).

SIDE B
Platform + Toe clip attachable

OPTIONS

EMP201
Nylon

EMP061
Webbing strap

E-PS801 EXPERT

INDOOR | EPS-M | OVER SIZED | NEEDLE

▶ TRIPLE INTERFACE INDOOR PEDALS

A strong, durable and versatile indoor pedal. Featuring an oversize axle and sealed & needle bearings and a robust mechanism. Interface allows use with: 1. EPS-M (Compatible Shimano MTB system). 2. Platform pedals. 3. Toe clips and straps.

- **Oversize axle**
- **Oversize bearings**

INTERFACE EPS-M (Compatible with Shimano SPD).
BODY Aluminum.
AXLE Oversize heat-treated, CNC-machined Cr-Mo.
BEARINGS Oversize sealed & needle.
BINDING Corrosion resistant, single-sided, Cr-Mo adjustable tension.
CLEATS E-C05F
OTHER Also compatible with conventional bicycles (outside use).
SIZE 110 x 70 mm
WEIGHT 540 g/pr

Patented

ATTACHING TOE CLIPS

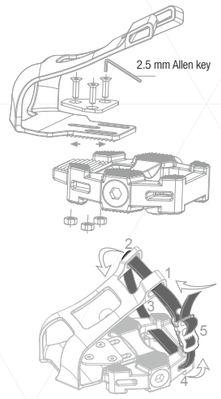

Illustrations may not correspond to your model of pedal.

SIDE A EPS-M
(Compatible with Shimano SPD).

SIDE B
Platform + Toe clip attachable

OPTIONS

EMP201
Nylon

EMP061
Webbing strap

E-PS815 EXPERT

INDOOR | EPS-M | OVER SIZED | NEEDLE

▶ TRIPLE INTERFACE INDOOR PEDALS

A strong, durable indoor pedal. Featuring an oversize axle and sealed & needle bearings. Interface allows use with: 1. EPS-M (Compatible Shimano MTB system). 2. Platform pedals. 3. Toe clips and straps.

- **Extra-strength oversize bearings**
- **Oversize axle**

INTERFACE EPS-M (Compatible with Shimano SPD).
BODY Aluminum.
CAGE Aluminum, ED black.
AXLE Oversize heat-treated, CNC-machined Cr-Mo.
BEARINGS Oversize sealed & needle.
BINDING Single-sided, Cr-Mo adjustable tension.
CLEATS E-C05F
OTHER Also compatible with conventional bicycles (outside use).
SIZE 110 x 70 mm
WEIGHT 510 g/pr

Patented

CLEAT TECHNOLOGY

WIDE ANGLE

EASY TOE-IN CLEAT ENGAGEMENT

Allows a wider angle range for easier toe-in engagement.

E-ARC5+ / E-BLK5+

INDOOR ROAD EPS COLOUR

EPS Compatible with Look Delta pedals, and Exustar pedal series

Compatible with Look Delta pedals, and Exustar pedal series: PR70, PR10, PS7, PS8, PS9, PS10, PS11.

INTERFACE EPS (Compatible with Look Delta pedals).
MODE E-ARC5: Floating (9°), E-BLK5: Fixed position.
MATERIAL Engineering thermoplastic / TPU plastic.
WEIGHT 52 g/pr

Patented

Floating

Fixed position

E-ARC11+ / E-BLK11+

INDOOR ROAD EPS COLOUR

EPS-R Compatible with Look Keo pedals, and Exustar pedal series

Compatible with Look Keo pedals, and Exustar pedal series: PR1, PR2, PR3, PR16, PR17, PS207.

INTERFACE EPS-R (Compatible with Look Keo pedals).
MODE E-ARC11: Floating (7°), E-BLK11: Fixed position.
MATERIAL Engineering thermoplastic / TPU plastic.
WEIGHT 46 g/pr

Patented

Floating

Fixed position

* Always choose cleats that are compatible with both your pedals and shoes.

E-ARC10 / E-BLK10

INDOOR ROAD EPS-R COLOUR

▶ EPS-R Compatible with Look Keo pedals

Compatible with Exustar Look keo-style pedal series, and Look Keo pedals.

INTERFACE EPS-R (Compatible with Look Keo pedals).
MODE E-ARC10: Floating (7°), E-BLK10: Fixed position.
MATERIAL Engineering thermoplastic.
WEIGHT 48 g/pr

Patented

Floating | Fixed position

E-ARC1 / E-BLK1

INDOOR ROAD EPS COLOUR

▶ EPS Compatible with Look Delta pedals

Compatible with Exustar pedal series: PR70, Exustar Look Delta-style pedals.

INTERFACE EPS (Compatible with Look Delta pedals).
MODE E-ARC1: Floating (9°), E-BLK1: Fixed position.
MATERIAL Engineering thermoplastic.
WEIGHT 46 g/pr

Patented

Floating | Fixed position

E-C03F

INDOOR MTB EPS-M FORGED

▶ EPS-M Compatible with Shimano SPD pedals

Entry Level (Easier disengagement).

INTERFACE EPS-M (Compatible with Shimano SPD pedals).
FORGED Cr-Mo steel.
WEIGHT 40 g/pr

Patented

E-C05F

INDOOR MTB EPS-M FORGED

▶ EPS-M Compatible with Shimano SPD pedals

INTERFACE EPS-M (Compatible with Shimano SPD pedals).
FORGED Cr-Mo steel.
WEIGHT 42 g/pr

Patented

* Always choose cleats that are compatible with both your pedals and shoes.

CLEAT COVERS

When walking in bike shoes, cleat covers eliminate cleat wear, and improve safety and comfort. Red and black covers are the same size; either can be used on floating or fixed position cleats.

E-CK3B / E-CK3R

INDOOR ROAD EPS-R COLOUR

▶ CLEAT COVERS

• Lightweight, durable, flexible.

COMPATIBILITY EPS-R cleats
(Look Keo-style: E-ARC10, E-BLK10, E-ARC11, E-BLK11).
WEIGHT 96 g/pr

Patented

E-CK3B | E-CK3R

E-CK1B / E-CK1R

INDOOR ROAD EPS COLOUR

▶ CLEAT COVERS

• Lightweight, durable, flexible.

COMPATIBILITY Look Delta-style cleats
(E-ARC1, E-BLK1, E-ARC2, E-BLK2).
WEIGHT 74 g/pr

Patented

E-CK1B | E-CK1R

E-CK2B / E-CK2R

INDOOR MTB EPS-M COLOUR

▶ CLEAT COVERS

• Lightweight, durable, flexible.

COMPATIBILITY EPS-M cleats
(Compatible Shimano MTB system: E-C01F, E-C03F, E-C05F).
WEIGHT 13 g/pr

Patented

E-CK2B | E-CK2R

* Always choose cleats that are compatible with both your pedals and shoes.

PEDAL ACCESSORIES

CLIP-IN PEDAL ADAPTERS

Clip-in pedal adapters allow a user of clip-in pedals to conveniently and safely use them wearing ordinary sports shoes. The pedal adapter set consists of four (4) parts: a pedal-like platform, a toeclip, a toe strap, and a cleat (3 bolt hole or 2 bolt hole). A rider uses the adapter much like an ordinary platform pedal. The adapter can be used with or without a toe-clip and strap.

Note: The pedal adapter unit is not a pedal nor a replacement for one. It does not have an axle.

E-SL02A

INDOOR

▶ CLIP-IN PEDAL ADAPTERS

E-SL02 Platform + E-ARC1 Cleat + Toe Clip.

PEDAL INTERFACE EPS (Compatible with Look Delta pedals).
CLEATS E-ARC1
MATERIAL Engineering thermoplastic.
WEIGHT 379 g/pr

Patented

E-SL02B

INDOOR

▶ CLIP-IN PEDAL ADAPTERS

E-SL02 Platform + E-BLK1 Cleat + Toe Clip.

PEDAL INTERFACE EPS (Compatible with Look Delta pedals).
CLEATS E-BLK1
MATERIAL Engineering thermoplastic.
WEIGHT 379 g/pr

Patented

E-SL02D

INDOOR

▶ CLIP-IN PEDAL ADAPTERS

E-SL02 Platform + E-C01F Cleat + Toe Clip.

PEDAL INTERFACE EPS (Compatible with Look Delta pedals).
CLEATS E-C01F
MATERIAL Engineering thermoplastic.
WEIGHT 363 g/pr

Patented

SHOE TECHNOLOGY

CLEAT POSITION INDICATOR

Lines and numbers are marked on the shoe sole. Having ascertained your optimum cleat position on one shoe, by using the indicator as a guide, you can easily reproduce that position on the second shoe. Also handy when you replace old cleats with new–just duplicate the original position.

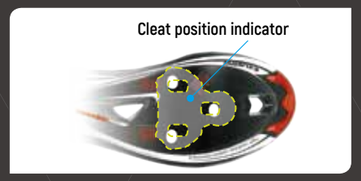

AIR CONTROL

Strategically placed vents in road shoe soles promote air circulation, which keeps feet cooler and drier.

AIR

REPLACEABLE WALK PAD

A replaceable screw-on TPU anti-slip walk pad. Being able to replace the walk pad helps prolong the life of your shoes.

LARGER SIZES

LARGE SIZE SHOES

Exustar introduces our first pair of large size cycling shoes. With sizes ranging from 35–59, this high-end product is perfect for the discerning indoor or outdoor cyclist with larger feet. For details see page 41.

Size 35 ~ 59

M2

MICROLOCK M2 CLOSURE

The Microlock M2 is Exustar's 2nd generation cam and ratchet strap closure system. Besides being lighter and more compact, the M2 has several key advantages over our standard Microlock system:

Buckle is position-adjustable–there is a choice of two bolt hole positions so riders can individualise the basic setup.

Ratchet strap is easily replaceable.

Extra strong, forged tightening lever is shaped for easy access while riding.

Highly responsive release button is perfect in high pressure competition situations.

GUIDE TO SHOE SOLES

10 STIFFNESS

Stiffness 10

Slimline Carbon Fiber Sole
An extremely rigid, lightweight full carbon fiber sole for high performance riding.

8 STIFFNESS

Stiffness 8

Nylon-fiberglass Composite Sole
A sole constructed of nylon-fiberglass with good stiffness and durability characteristics.

5 STIFFNESS

Stiffness 5

Rubber Sole
Sole made from natural rubber.

INDOOR SHOES

E-SP319 ADVANCED

INDOOR · EPS-R · EPS-SL · EPS-M · M2

Stiffness 8

Nylon-fiberglass Composite Sole

A sole constructed of nylon-fiberglass with good stiffness and durability characteristics.

INDOOR SPECIFIC

▶ SAFEWALK INDOOR CYCLING SHOES

A unique shoe designed specifically for indoor cycling. It features SafeWalk elevated heel and toe for more comfortable and safe walking. Perfect for dedicated indoor athletes.

- **SafeWalk elevated heel and toe**

UPPER Microfiber leather, breathable mesh.
CLOSURE Microlock M2 buckle, Velcro straps.
SOLE Nylon-fiberglass composite with Air Control vents, TPU walk pad.
INSOLE Washable, perforated EVA.
INTERFACE 3 bolt hole cleats. / 2 bolt hole cleats.
SIZE 37-48
WEIGHT 775 g/pr

Patented

E-SR4153 ADVANCED

INDOOR · EPS-R · EPS-SL · LARGER SIZES · M2

Stiffness 10

Slimline Carbon Fiber Sole

An extremely rigid, lightweight full carbon fiber sole for high performance riding.

Stiffness 8

Nylon-fiberglass Composite Sole

A sole constructed of nylon-fiberglass with good stiffness and durability characteristics.

LARGER SIZES

▶ ROAD-STYLE INDOOR CYCLING SHOES Larger sizes

An indoor cycling shoe engineered for top performance. It features a contoured, supple PU leather upper, with breathable mesh, and a Microlock M2 buckle. The sole has built-in Air Control vents to help keep you cool, and non-slip walk pads are ready when your feet touch the ground. With either nylon-fiberglass composite or carbon fiber soles (depending on size).

- **Larger sizes**

UPPER PU leather, breathable mesh.
CLOSURE Microlock M2 buckle, Velcro straps.
SOLE Nylon-fiberglass composite (size 35–48). Carbon fiber (size 49–59).
INSOLE Washable perforated EVA.
INTERFACE 3 bolt hole cleats.
SIZE 35~59
WEIGHT 605 g/pr

Patented

E-SR404 SPORT

INDOOR ROAD EPS-R EPS-SL EPS-M AIR

Stiffness 8

Nylon-fiberglass Composite Sole
A sole constructed of nylon-fiberglass with good stiffness and durability characteristics.

▶ ROAD-STYLE INDOOR CYCLING SHOES

A unique shoe designed specifically for indoor cycling. It features SafeWalk elevated heel and toe for more comfortable and safe walking. Perfect for dedicated indoor athletes.

UPPER PU leather, breathable mesh.
CLOSURE Velcro straps.
SOLE Nylon-fiberglass composite with Air Control vents, TPU walk pad.
INSOLE Washable, perforated EVA.
INTERFACE 3 bolt hole cleats. / 2 bolt hole cleats.
SIZE 37-48
WEIGHT 562 g/pr

Patented

COLOR OPTION

E-SR404A

E-SR404B SPORT

INDOOR ROAD EPS-R EPS-SL EPS-M AIR

Stiffness 8

Nylon-fiberglass Composite Sole
A sole constructed of nylon-fiberglass with good stiffness and durability characteristics.

▶ ROAD-STYLE INDOOR CYCLING SHOES

Sport level road shoe. It features a contoured, comfortable PU leather upper, with breathable mesh, and a Microlock buckle. The nylon-fiberglass composite sole has built-in Air Control vents to help keep you cool, and anti-slip walk pads are ready when your feet touch the ground.

UPPER PU leather, breathable mesh.
CLOSURE Microlock buckle, Velcro straps.
SOLE Nylon-fiberglass composite with Air Control vents, TPU walk pad.
INSOLE Washable, perforated EVA.
INTERFACE 3 bolt hole cleats. / 2 bolt hole cleats.
SIZE 37-48
WEIGHT 614 g/pr

Patented

COLOR OPTION

E-SR404AB

E-SM308 SPORT

Stiffness 8

Nylon-fiberglass Composite Sole
A sole constructed of nylon-fiberglass with good stiffness and durability characteristics.

▶ MTB-STYLE INDOOR CYCLING SHOES

This MTB shoe features a contoured, comfortable PU leather upper, with breathable mesh, and Velcro straps. The nylon-fiberglass composite sole has integrated TPU tread for all-terrain conditions.

UPPER PU leather, breathable mesh.
CLOSURE Velcro straps.
SOLE Nylon-fibreglass composite with TPU tread, anti-slip pedal pad, toe spikes attachable.
INSOLE Washable perforated EVA.
INTERFACE 2 bolt hole cleats.
SIZE 37-48
WEIGHT 626 g/pr

Patented

COLOR OPTIONS

E-SM308A

E-SM308D

E-SM308B SPORT

Stiffness 8

Nylon-fiberglass Composite Sole
A sole constructed of nylon-fiberglass with good stiffness and durability characteristics.

▶ MTB-STYLE INDOOR CYCLING SHOES

This MTB shoe features a contoured, comfortable PU leather upper, with breathable mesh, microlock buckle and velcro straps. Velcro straps. The nylon-fiberglass composite sole has integrated TPU tread for all-terrain conditions.

UPPER PU leather, breathable mesh.
CLOSURE Microlock buckle, Velcro straps.
SOLE Nylon-fibreglass composite with TPU tread, anti-slip pedal pad, toe spikes attachable.
INSOLE Washable perforated EVA.
INTERFACE 2 bolt hole cleats.
SIZE 37-48
WEIGHT 668 g/pr

Patented

COLOR OPTIONS

E-SM308AB

E-SM308DB

INDOOR SHOES

E-SM825-RD SPORT

INDOOR · ENDURO · AM · URBAN · TOUR · EPS-M

Stiffness 5

Rubber Sole
Sole made from natural rubber.

▶ RIDE-WALK / INDOOR CYCLING SHOES

Shoe designed for both cycling and walking.
Features toe & ankle abrasion guards.
Compatible with clip-in or platform pedals.

- **Screw-on cleat recess cover**
- **Elastic lace holder**

UPPER Hot melt PU sheet with breathable mesh.
CLOSURE Laces.
SOLE Rubber with EVA wedge. Screw-on cleat recess cover.
INSOLE Washable, perforated EVA.
INTERFACE 2 bolt hole cleats.
SIZE 37-48
WEIGHT 788 g/pr

Patented

COLOR OPTION

E-SM825-BL

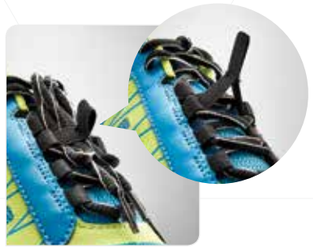

ELASTIC LACE HOLDER

EPX DRIVE SYSTEM

INDOOR

FOR INDOOR BIKES

The new Exustar EPX Drive system consists of pedals and a crankset connected by the innovative EPX Interface.

The EPX Interface is a 10 tooth splined system that connects the pedal axle to the crank arm (crankset is compatible with ISIS Drive bottom brackets).

EPX guarantees a stronger, more reliable pedal-to-crank interface that will stand up to rigorous use by the the heaviest and most aggressive riders in the fitness center environment.

This indoor cycling-specific system is designed for optimal strength and durability. Flexibility of use is also factored into the EPX system: Optionally, Exustar pedals can be fitted with longer more beefy axles that suit users with larger, heavier physiques, and/or large–extra large shoe sizes.

THE BENEFITS OF THE EPX DRIVE

- **Stronger interface**
- **More stable and durable**
- **It can be used with large diameter axles**
- **It can be used with longer axles**

The EPX Drive System will be available with Exustar E-X9SA, E-X10SA and E-X11SA pedals. See page 51.

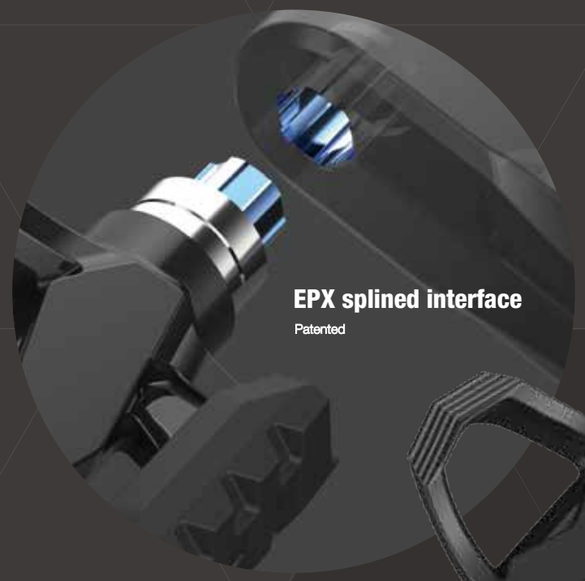

EPX splined interface
Patented

CRANKSET

BOTTOM BRACKET

ISIS DRIVE INTERFACE

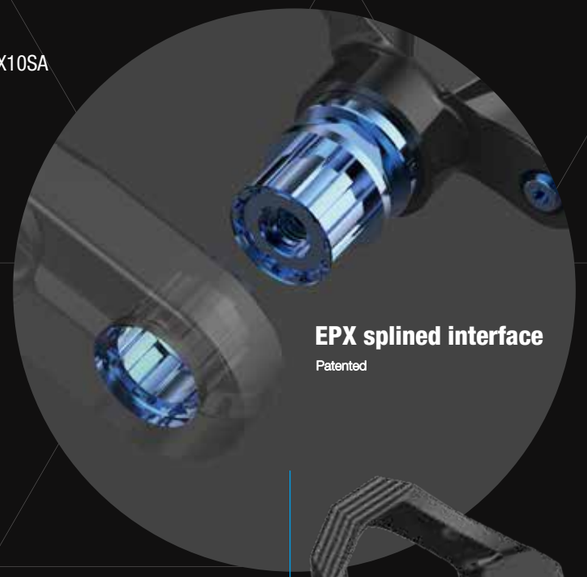

EPX splined interface
Patented

EPX

INDOOR

INDOOR PEDALS

WITH EPX DRIVE

EPX DRIVE SYSTEM
For Indoor Bikes

E-X9SA EXPERT

INDOOR · EPS · LARGER SIZES · WIDE

INDOOR PEDALS With oversize axle

INTERFACE EPS (Compatible with Look Delta).
BODY Aluminum, nickel plated & ED black, corrosion resistant.
AXLE Heat-treated, supersize CNC-machined Cr-Mo.
Anti-loosening device.
BEARINGS Quad LSL bearings.
BINDINGS Look Delta-style: Fiberglass-reinforced thermoplastic, tension adjustable with gauge.
CLEATS E-ARC1
SIZE 88 x 94 mm
WEIGHT 655 g/pr

Patented

E-X10SA EXPERT

INDOOR · EPS · LARGER SIZES · WIDE

INDOOR PEDALS With supersize axle

INTERFACE EPS (Compatible with Look Delta).
BODY Aluminum, nickel plated & ED black, corrosion resistant.
AXLE Heat-treated, supersize CNC-machined Cr-Mo.
Antiloosening device.
BEARINGS Quad LSL bearings.
BINDING Look Delta-style: Fiberglass-reinforced thermoplastic, tension adjustable with gauge.
CLEATS E-ARC1
SIZE 89 x 94 mm
WEIGHT 645 g/pr

Patented

E-X11SA EXPERT

INDOOR · EPS · EPS-M · LARGER SIZES · WIDE

DUAL BINDING INDOOR PEDALS With supersize axle

INTERFACE EPS (Compatible with Look Delta). + EPS-M (Compatible with Shimano SPD).
BODY Aluminum, nickel plated & ED black, corrosion resistant.
AXLE Heat-treated, supersize CNC-machined Cr-Mo.
Antiloosening device.
BEARINGS Quad LSL bearings.
BINDINGS Look Delta-style: Fiberglass-reinforced thermoplastic,
tension adjustable with gauge.
EPS-M: Corrosion resistant Cr-Mo, tension adjustable with gauge.
CLEATS E-ARC1 & E-C05F
SIZE 89 x 94 mm
WEIGHT 817 g/pr

Patented

SPECIFICATIONS

PEDALS

		E-PS8	E-PS8SS	E-PS8SSP	E-PS7	E-PS7F-GD	E-PS7SSP	E-PS9SA	E-PS9	E-PS9CA	E-PS9FSA-BL	E-PS9F-GD	E-PS9FCA-RD	E-PS10SA
BODY	Aluminum, nickle plated & ED black, corrosion resistant	•	•	•	•			•	•	•				•
	Forged aluminum, anodized					•					•	•	•	
AXLE	Cr-Mo, Heat-treated, CNC-machined	•	•	•	•	•	•	•	•	•	•	•	•	•
	Oversize	•	•	•	•	•	•	•	•	•		•	•	
	Supersize										•			•
	Cartridge									•			•	
	Anti-loosening device										•			•
BEARINGS	Oversize seal & needle	•	•	•	•	•	•	•	•			•		
	Oversize seal & needle (integrated cartridge)									•			•	
	Quad LSL										•			•
INTERFACE	Look Delta-Style	•	•	•	•	•	•	•	•	•	•	•	•	•
	Compatible Shimano MTB system	•			•	•								
CLEATS	E-ARC1	•	•	•	•	•	•	•	•	•	•	•	•	•
	E-C05F	•			•	•								
	E-ARC11+													
SIZE mm		87x94	87x94	87x94	87x94	87x94	87x94	88x94	88x94	88x94	88x94	88x94	88x94	89x94
WEIGHT g/pr		560	540	475	540	540	475	655	524	518	660	531	521	645
PAGE		10	11	11	12	13	13	14	15	15	16	17	17	18

CLEATS

		E-BLK5+ E-ARC5+	E-BLK11+ E-ARC11+	E-BLK10 E-ARC10	E-BLK1 E-ARC1	E-C03F	E-C05F	E-CK3B	E-CK3R E-CK3B	E-CK1R E-CK1B	E-CK2R E-CK2B	E-SU02A	E-SU02B	E-SU02D
PEDAL INTERFACE	EPS (Compatible with Look Delta pedals)	•			•									
ADAPTOR MATERIAL	Engineering thermoplastic.	•	•	•	•							•	•	•
WEIGHT g/pr		52	46	48	46	40	42	96	74	13	379	379	363	
PAGE		31	31	32	32	32	32	33	33	33	35	35	35	

PEDALS

		E-PS10	E-PS10CA	E-PS11SA	E-PS11	E-PS11CA	E-PS207	E-PS916SA-A0	E-PS916SA	E-PS916-A0	E-PS916	E-PS301	E-PS915
BODY	Aluminum, nickle plated & ED black, corrosion resistant	•	•	•	•	•	•						•
	Aluminum							•	•	•	•	•	
AXLE	Cr-Mo, Heat-treated, CNC-machined	•	•	•	•	•	•	•	•	•	•	•	•
	Oversize	•	•		•	•	•			•	•	•	•
	Supersize			•				•	•				
	Cartridge		•			•							
	Anti-loosening device			•				•	•				
BEARINGS	Oversize seal & needle				•		•			•	•	•	•
	Oversize seal & needle (integrated cartridge)		•			•							
	Quad LSL			•				•	•				
INTERFACE	Look Delta-Style	•	•	•	•	•	•						
	Compatible Shimano MTB system			•	•	•	•	•	•	•	•	•	•
	Shimano PSD-Style							•	•	•	•	•	•
	Toe clip (Option)							•		•		•	•
CLEATS	E-ARC1	•	•	•	•	•							
	E-C05F			•	•	•	•	•	•	•	•	C01F	•
	E-ARC11+						•						
SIZE mm		89x94	89x94	89x94	89x94	89x94	87x90	98x115	98x165	98x115	98x115	110x70	110x70
WEIGHT g/pr		516	508	817	688	680	530	-	-	-	-	540	510
PAGE		19	19	21	22	23	25	26	26	27	27	28	28

SHOES

		E-SP219	E-SR4153	E-SR404	E-SR404B	E-SM308	E-SM308B	E-SM825-RD
UPPER	Microfiber leather	•						
	Hot melt PU sheet							•
	PU leather		•	•	•	•	•	
	Breathable mesh	•	•	•	•	•	•	•
CLOSURE	Velcro straps			•		•		
	Microlock M2 buckle Velcro straps	•	•					
	Microlock buckle Velcro straps				•		•	
SOLE	Carbon-fiberglass		• (#49-59)					
	Rubber with EVA wedge	•						
	Screw-on cleat recess cover							•
	Nylon-fiberglass composite	•	• (#35-48)	•	•	•	•	
	Elevated, non-slip rubber heel and toe pads	•						
	Replaceable walk pads	•						
	Anti-slip pedal pad	•				•	•	
INSOLE	Washable, perforated EVA	•	•	•	•	•	•	•
INTERFACE	Compatible with Look Keo-Style	•	•	•	•			
	Compatible with Look Delta-Style	•	•	•	•			
	Compatible with Shimano SPD-SL	•	•	•	•			
	Compatible with Shimano SPD-Style	•				•	•	•
SIZE		37 - 48	35 - 59	37 - 48	37 - 48	37 - 48	37 - 48	37 - 48
WEIGHT g/pr		775	605	562	614	626	668	788
PAGE		40	41	42	43	44	45	46

EXUSTAR